Tacony CFC	Valet Aqua 40	
Part Number:	**VA40…**	
Series:	A	
Date:	01-Sep-25	
Reference Drawing Number:	09-1184-0000	
Reference Drawing Issue:	A	
Modified By:	C Savage	
Service Parts List Issue:	1	ECN #
Description of Change:		-

Ref. No.	Part No.	Part Description	Qty
1	87-0145-0000	Handle assembly	1
2	87-0146-0000	Switch assembly	1
3	87-0147-0000	Top cover assembly	1
4	87-0148-0000	Outlet cover assembly	1
5	87-0149-0000	Motor top cover assembly	1
6	87-0150-0000	Vacuum motor assembly	1
7	87-0151-0000	Motor base cover assembly	1
8	87-0152-0000	Float assembly	1
9	87-0153-0000	Wet pick up filter assembly	1
10	87-0154-0000	HEPA filter assembly	1
11	87-0155-0000	Cable clamp assembly	1
12	87-0156-0000	Ferrite sleeve	1
13	87-0118-0000	Power Cord 8M - UK	1
13a	87-0119-0000	Power Cord 8M - EURO	1
14	87-0163-0000	Handle assembly	1
15	87-0158-0000	Drum assembly 40L	1
16	87-0159-0000	Inlet assembly	1
17	87-0164-0000	Drain assembly	1
18	87-0161-0000	Chassis base 40L	1
19	87-0165-0000	Wheel assembly 40L - Rear L&R	1
20	87-0166-0000	Castors 40L - Set of 2	1
21	87-0026-0000	Vacuum hose assembly	1
22	87-0139-0000	Wand clip	1
23	87-0044-0000	Wand, Two-piece	1
24	FB116	Floor tool	1
25	87-0029-0000	Tool kit, Dusting brush, Crevice tool	1

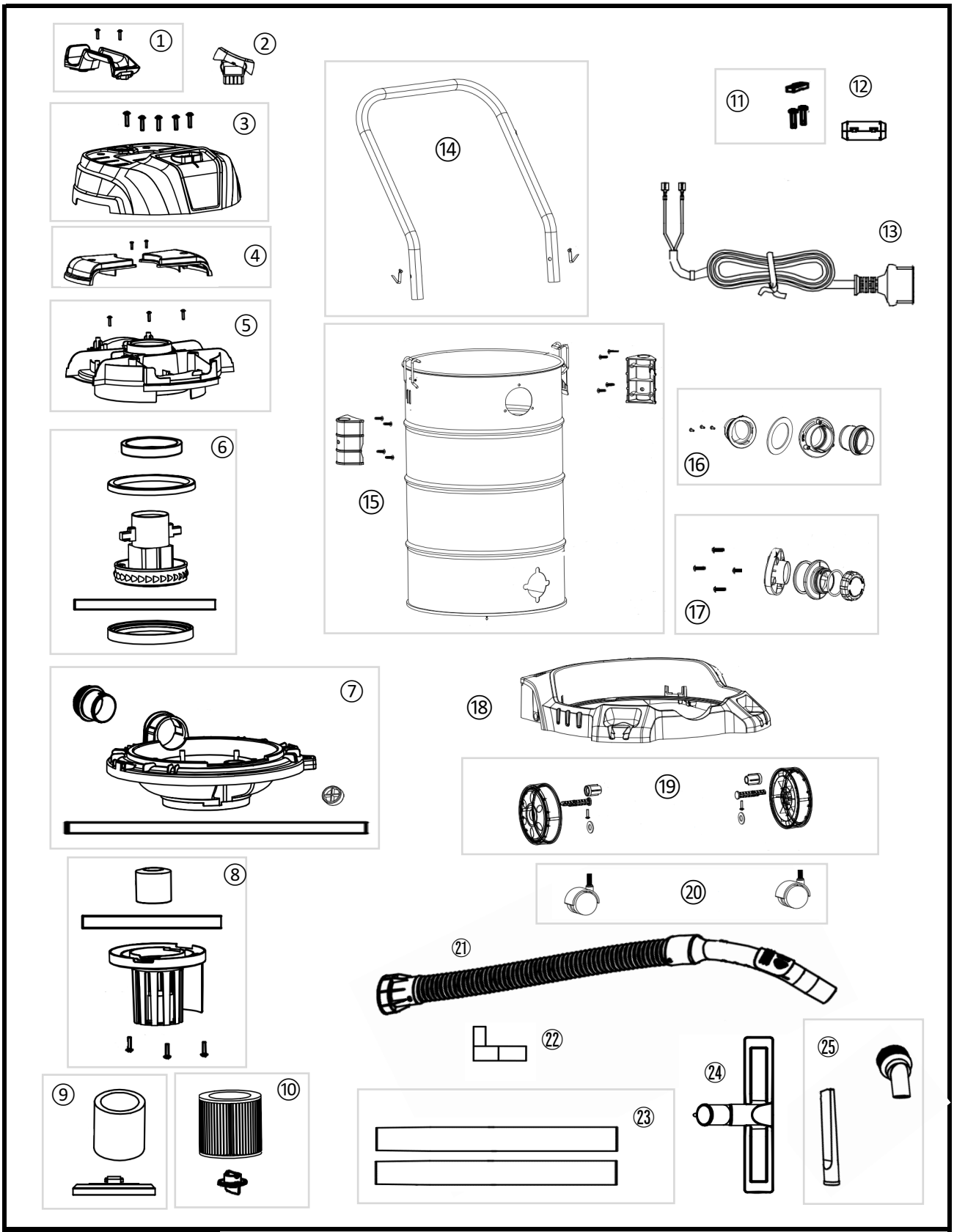

Tacony CFC			
Drawing Number:	**09-1184-0000**		
Machine	VA40		
Date:	01/09/2025	**Description of Change**	**ECN No.**
Drawing Issue:	A		
Modified By:	C Savage		